NOTE:

1. Material:
   - 1.1 Housing:PA6T Black, UL 94V-0
   - 1.2 CAP: PA6T Black
   - 1.3 Terminal:Sq. 0.50mm Brass,Gold Flash Plated Over Nickel
   - 1.3 Packing:Reel Package
2. All Material Must Be Comply With RoHS.

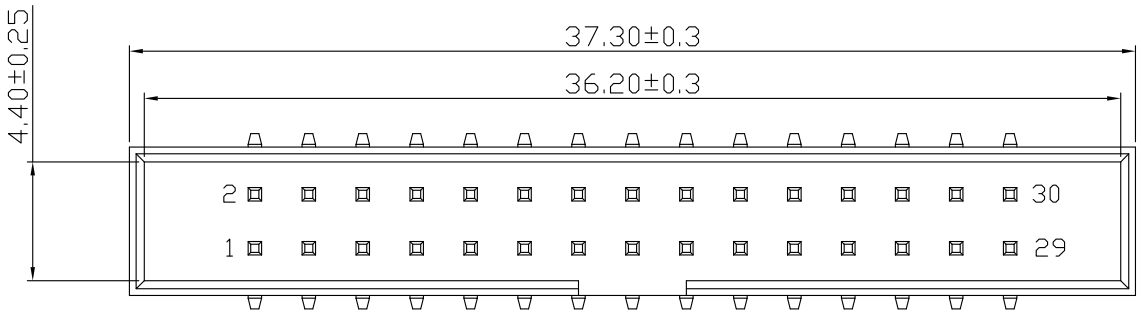

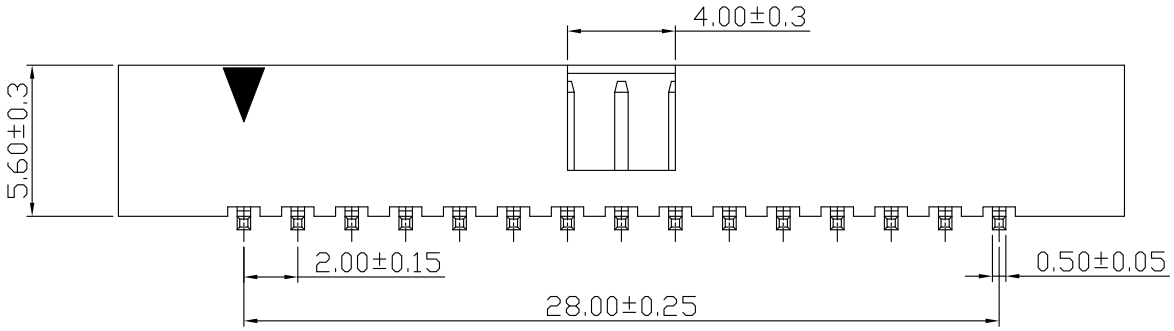

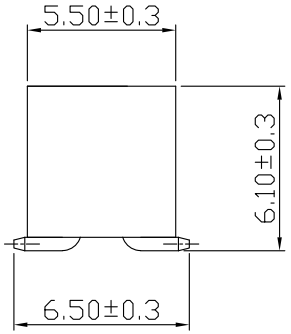

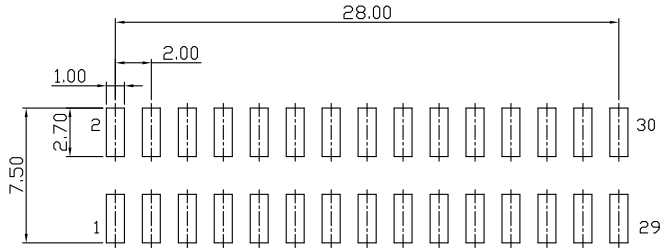

P.C.B. LAYOUT

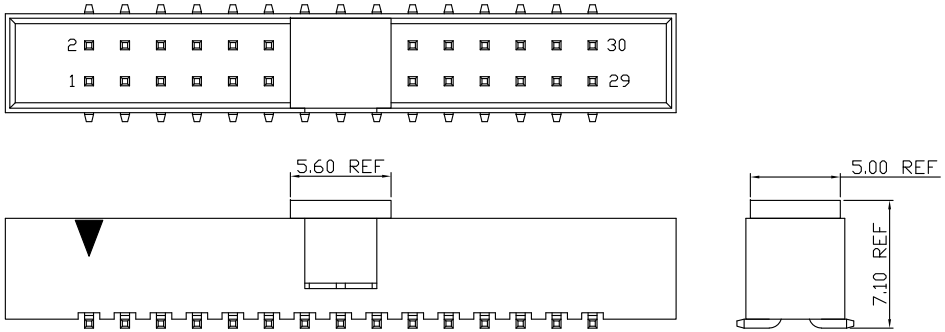

	DATE	ECR										TOLERANCE:	
△		NRFQ-2003-025	ARC ELECTRO INDUSTRY CORP. www.arc-electro.com			PART NAME: BOX HEADER P2.0 2x15P W/H CAP SMT TYPE				S/C NO		X. ±0.50	
△						PART NUMBER:5B1.2234G-13200.215						.X ±0.38	
△			APPROVAL	CHECKED	DRAWING	DRAWING NO	DATE	REV	SCALE	UNIT	NO.	.XX ±0.25	B1259
△			Kevin	Yipeng	Yipeng	AK13052	20250324	1.0		mm	1/2	.XXX ±0.15	D003-S109

5GC.BD.0010A

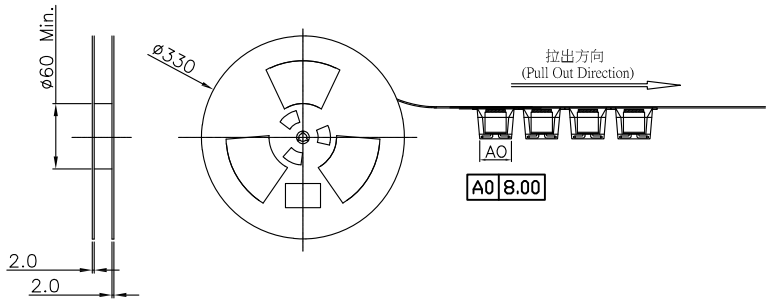

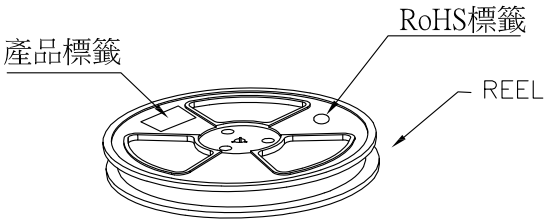

700PCS/REEL

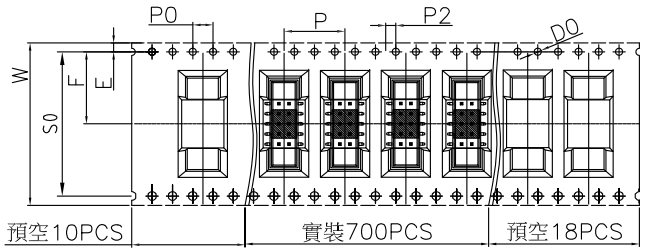

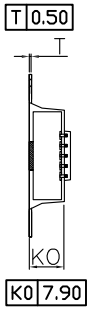

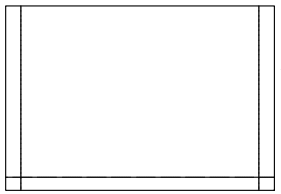

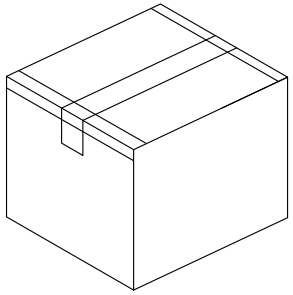

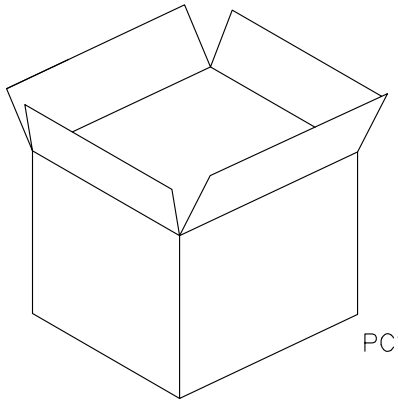

PCS/CARTON

Pin	每卷數量	每箱數量	W	S0	F
2X15P	700	4200	56.0	52.4	26.2
載帶前後空格	卷帶內空10個格，卷帶外留空18個格位				
載帶材質	PS/L=8736MM				
紙箱規格	345×345×407MM				

△	DATE	ECR
△		NRFQ-2003-025
△		
△		
△		

ARC ELECTRO INDUSTRY CORP.
www.arc-electro.com

PART NAME: BH P2.0 2x15P SMT TYPE

PART NUMBER: 5B1.2234G-11200.215

S/C NO

APPROVAL	CHECKED	DRAWING	DRAWING NO	DATE	REV	SCALE	UNIT	NO.
Kevin	Yipeng	Yipeng	AK13052	20250324	1.0		mm	2/2

TOLERANCE:

X. ±0.50	
.X ±0.38	
.XX ±0.25	B1259
.XXX ±0.15	D003-S109

5GC.BD.0010A