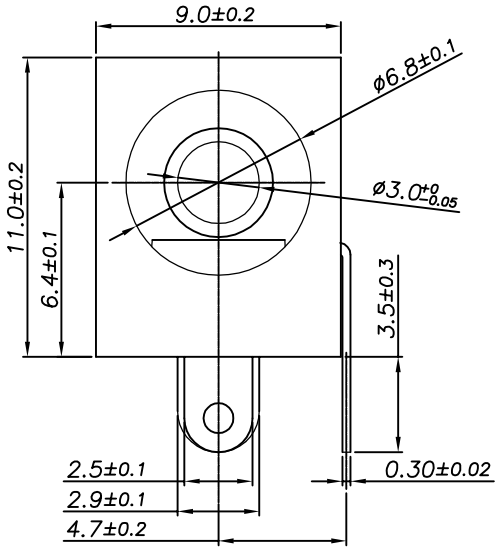

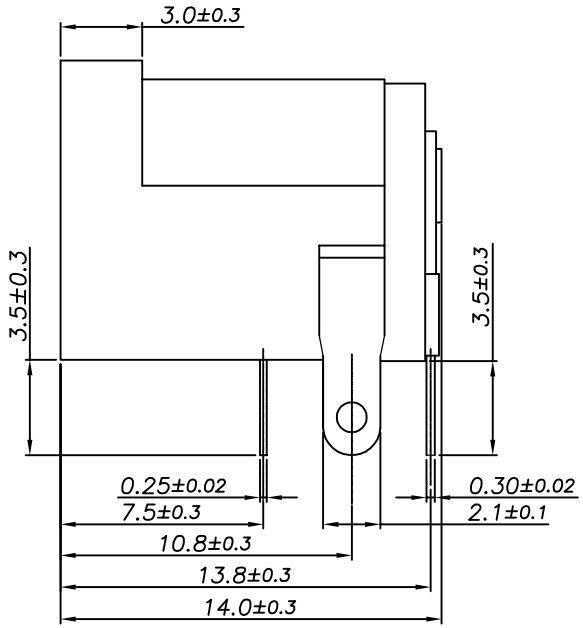

(3D View)

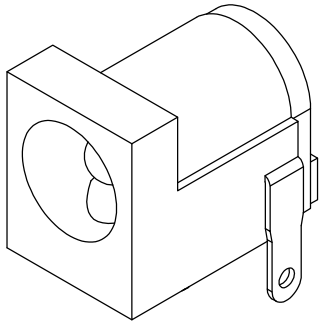

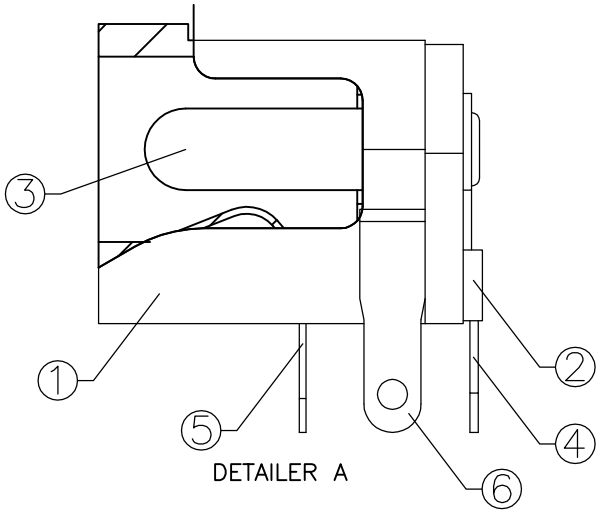

DETAILER A

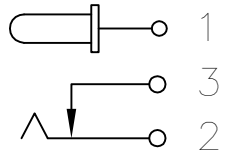

CIRCUIT DIAGRAM

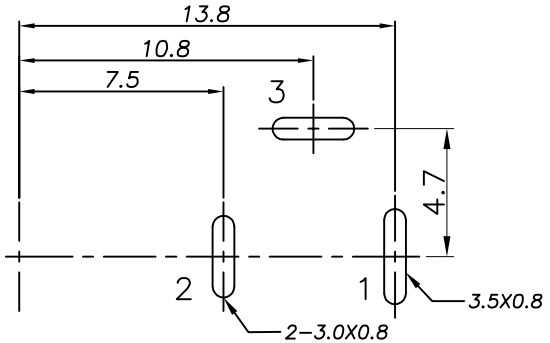

RECOMMENDED OF PC BOARD Holes
Tolerance:±0.05 (Bottom View)

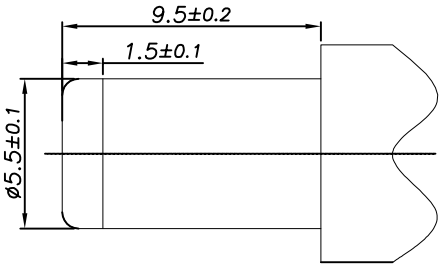

RECOMMEND MATE PLUG

NO.	PART NAME	TER.NO.	QT'Y	MATERIAL	PALTING
6	SHUNT TERMINAL		1	BRASS	Sn
5	TIP SPRING		1	PHOSPHOR BRONZE	Sn
4	CENTER PIN TERMINAL		1	BRASS	Sn
3	CENTER PIN		1	BRASS	Sn
2	COVER		1	PA66 UL94 V-0(Black)	
1	HOUSING		1	PA66 UL94 V-0(Black)	

DATE	ECR
	NRFQ-1911-024

ARC ELECTRO INDUSTRY CORP.
www.arc-electro.com

PART NAME: DC JACK 3P PINø3.0 / OD=6.8 L14.0 DIP TYPE

PART NUMBER: 5J1.2211F-11086.103

S/C NO

TOLERANCE:
.X ±0.30
.XX ±0.20
.XXX ±0.10

APPROVAL	CHECKED	DRAWING	DRAWING NO	DATE	REV	SCALE	UNIT	NO.
Philip	Sean	Sean	AK12920	20200417	1.2		mm	1/1

B1184
D028-R036