Materials

Shell: Copper Alloy, Tin Plating

Packing

Bag Package

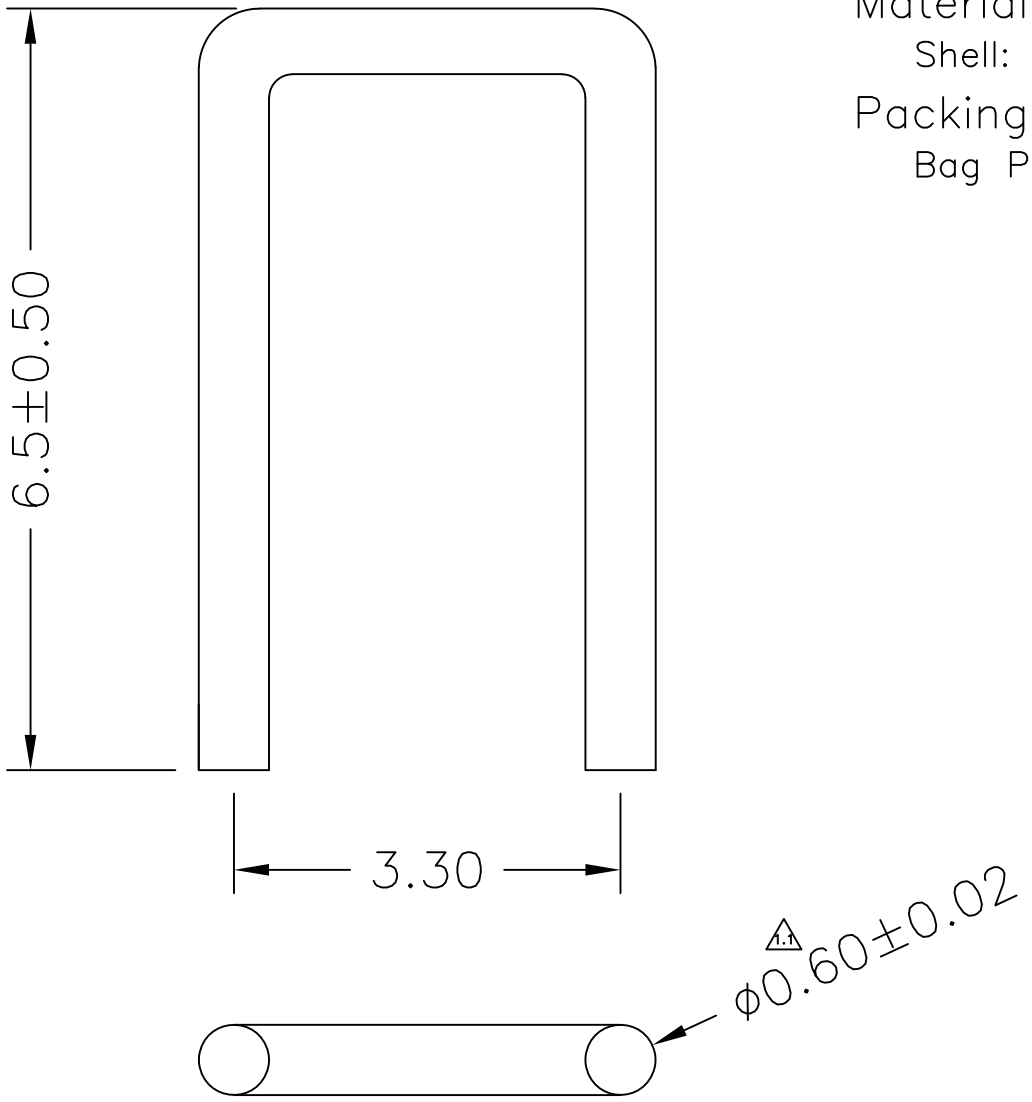

△	DATE	ECN NO.
1	2024.08.21	240807001
1.1	2025.06.09	變更尺寸

ARC ELECTRO INDUSTRY CORP.
www.arc-electro.com

APPROVAL	CHECKED	DRAWING	DRAWING NO.
Kevin	Yipeng	Yipeng	AK13035

TITLE	JUMP WIRE ϕ0.60mm				S/C NO.
PN.	2J2.2U320-12560.001				---
DATE	REVISION	SCALE	UNIT	PAGE	
20250609	1.1	---	mm	1/1	

TOLERANCE:			
X.	±0.40	.X	±5°
.X	±0.30	.XX	±3°
.XX	±0.20	B1264	
.XXX	±0.10	D099-BA15	