NOTE:
1. @ MEANS KEY DIMENSIONS, MUST BE CHECKED.
2. MATERIAL:
   2.1 CONTACT: BRASS.
   2.2 INSULATOR: UL94V-0(BLACK).
   2.3 FINISH: NICKEL UNDER GOLD FLASH OVER ALL
3. ALL MATERIAL MUST BE COMPLY WITH RoHS.
4. PART NO. LEGEND:
   5F1.212XX-K141H.210
   - XX: NO. OF POSITIONS
   - K: 4B: PA6T BLACK, NO MARK; A5: PA9T BLACK, NO MARK

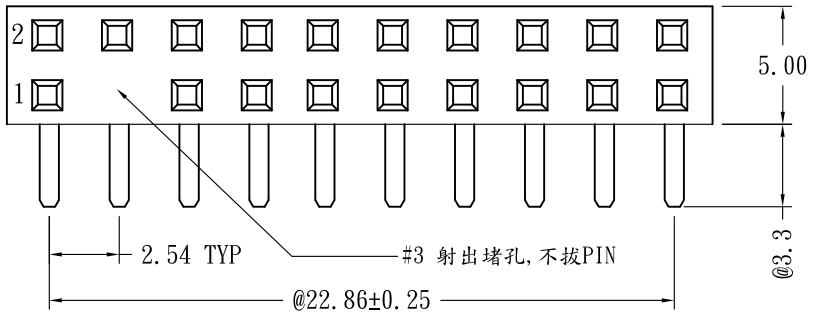


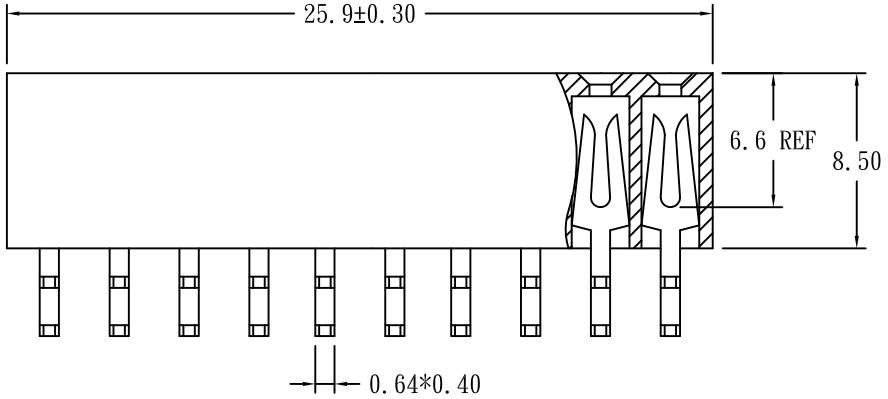


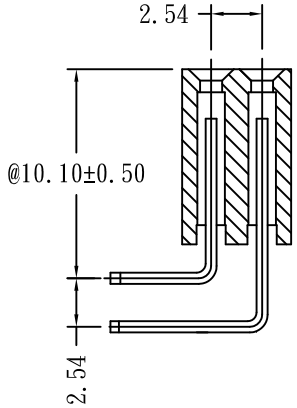


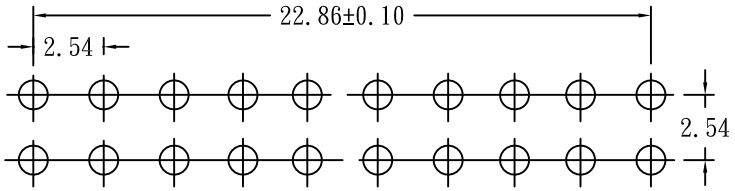


P.C.B LAYOUT TOL. ±0.05

| △ | DATE | ECR | ARC ELECTRO INDUSTRY CORP. | | | | PART NAME: FPH P2.54 90°2*10 #3P堵孔 | | | | S/C NO | TOLERANCE: | |
|---|---|---|---|---|---|---|---|---|---|---|---|---|---|
| △ | | | | | | | PART NUMBER: 5F1.212XX-K141H.210 | | | | | X. ±0.50 | .X ±2° |
| △ | | | | | | | | | | | | .X ±0.38 | .XX ±1° |
| △ | | | APPROVAL | CHECKED | DRAWING | DRAWING NO | DATE | REV | SCALE | UNIT | NO. | .XX ±0.25 | |
| △ | | | ROCK | ROCK | Rose | AK032XX | 221027 | 1.0 | | mm | | .XXX ±0.10 | D002-R012 |