

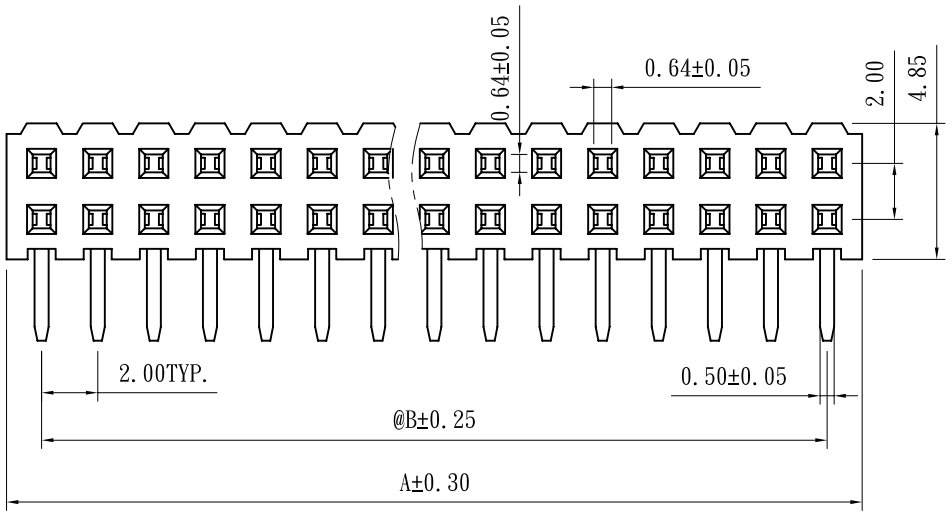

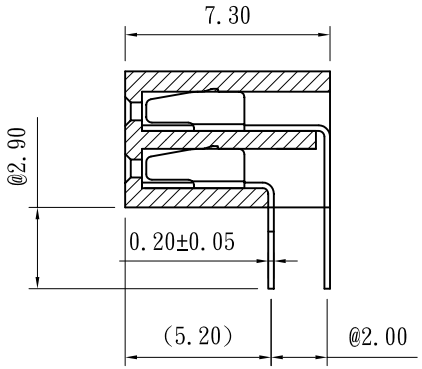

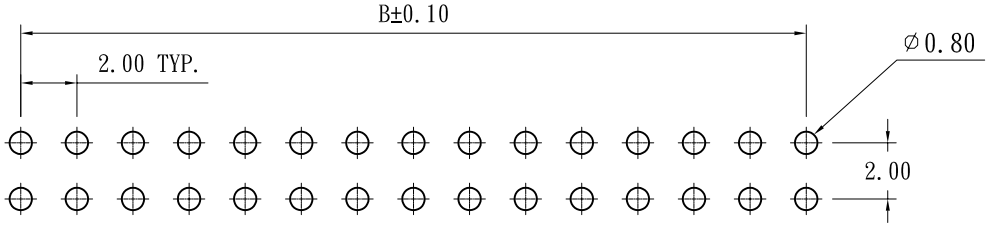

P.C.B LAYOUT TOL.: ±0.05

NOTE:
1. @ MEANS KEY DIMENSIONS, MUST BE CHECKED.
2. MATERIAL:
   2.1 CONTACT: PHOSPHOR BRONZE.
   2.2 INSULATOR: PA6T OR PA9T UL 94V-0(BLACK).
   2.3 FINISH: GOLD FLASH OVER NI.
3. ALL MATERIAL MUST BE COMPLY WITH SONY SS-00259 OR RoHS.
4. PART NO. LEGEND:

5F1.222XX-SXX00.2XX

- XX: NO. OF POSITIONS
- XX: 10:GOLD FLASH;DIP=2.90mm; 16:GOLD FLASH;DIP=2.70mm
- XX: 4B:PA6T BLACK, NO MARK; A5:PA9T BLACK, NO MARK; B5:PA9T BLACK, NO MARK (SONY GP)
- XX: PITCH 2.00mm

DIMENSION LIST

USE NO.	NO. OF POSITIONS	A	B	USE NO.	NO. OF POSITIONS	A	B
	02	4.50	2.00		22	44.50	42.00
	03	6.50	4.00		23	46.50	44.00
	04	8.50	6.00		24	48.50	46.00
	05	10.50	8.00		25	50.50	48.00
	06	12.50	10.00		26	52.50	50.00
	07	14.50	12.00		27	54.50	52.00
	08	16.50	14.00		28	56.50	54.00
	09	18.50	16.00		29	58.50	56.00
	10	20.50	18.00		30	60.50	58.00
	11	22.50	20.00		31	62.50	60.00
	12	24.50	22.00		32	64.50	62.00
	13	26.50	24.00		33	66.50	64.00
	14	28.50	26.00		34	68.50	66.00
	15	30.50	28.00		35	70.50	68.00
	16	32.50	30.00		36	72.50	70.00
	17	34.50	32.00		37	74.50	72.00
	18	36.50	34.00		38	76.50	74.00
	19	38.50	36.00		39	78.50	76.00
	20	40.50	38.00		40	80.50	78.00
	21	42.50	40.00				

△	DATE	ECR
△		
△		
△		
△		

ARC ELECTRO INDUSTRY CORP.

PART NAME: FPH P2.00 90°

PART NUMBER: 5F1.222XX-SXX00.2XX

S/C NO

APPROVAL	CHECKED	DRAWING	DRAWING NO	DATE	REV	SCALE	UNIT	NO.
		王梅芳	AK00917	100810	1.4	/	mm	

TOLERANCE:

X. ±0.50	.X ±2°
.X ±0.30	.XX ±1°
.XX ±0.20	
.XXX ±0.10	D002-R111