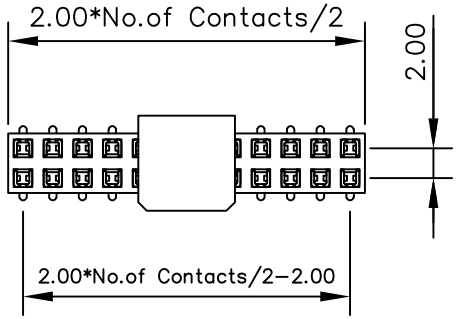

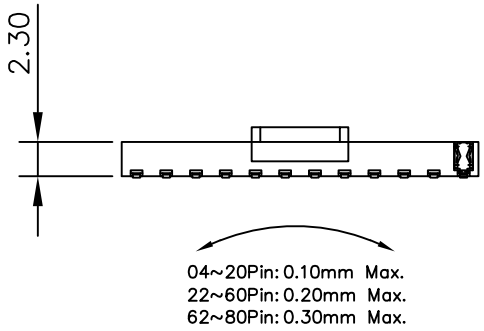

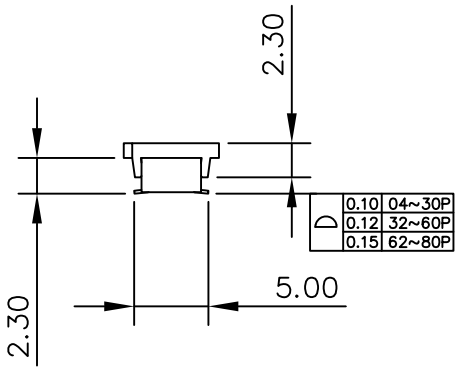

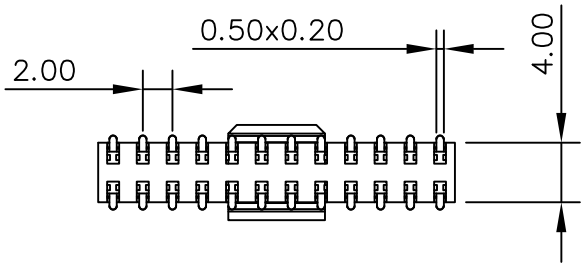

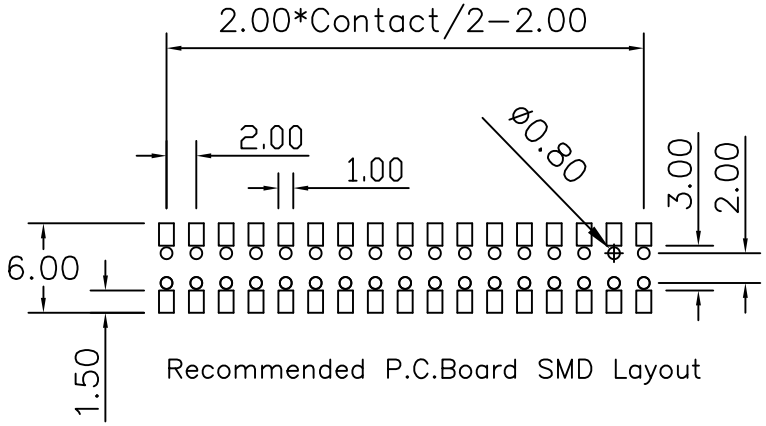

Specification

Materials:

1. Insulator: PA9T (UL 94V-0),Black
2. Contacts: Phosphor Bronze,Gold Flash All Over

Electrical:

1. Current Rating: 2A.
2. Voltage: 250V (r.m.s)
3. Dielectric Withstanding Voltage: 500V AC.
4. Contact Resistance: 20mΩ Max.
5. Insulation Resistance: 5000MΩ Min.

Environmental:

1. Operating Temperature: -40℃ to +105℃
2. Max Processing Temp:230℃ For 60 Seconds
3. Max Processing Temp: 260℃ For 10 Seconds

Order Information

5F1.2234B-WXX00.2XX

- NO. Of Positions
- 63:W/Cap/Reel
- 68:W/Cap/Tube

△	DATE	ECR
1.2	251230	變更圖面
△		
△		
△		

ARC ELECTRO INDUSTRY CORP.
www.arc-electro.com

PART NAME	FPH P2.00 SMD W/Cap/Reel	S/C NO
PART NUMBER	5F1.2234B-WXX00.2XX	

APPROVAL	CHECKED	DRAWING	DRAWING NO	DATE	REV	SCALE	UNIT	NO.
Kevin	Yipeng	Yipeng	AK11956	20251230	1.2		mm	1/1

TOLERANCE:

.X ±0.35	
.XX ±0.20	B350
.XXX ±0.10	D002-S121

5GC.BD.0010A