NOTE:

1. MATERIAL:
   - 1.1 CONTACT: PHOSPHOR BRONZE.
   - 1.2 INSULATOR: LCP UL 94V-0 (NATURE).
   - 1.3 FINISH: NICKEL UNDER TIN PLATED OVER ALL.
2. ALL MATERIAL MUST BE COMPLY WITH SONY SS-00259 OR RoHS.
3. PART NO. LEGEND:

5F2.2435E-126X1.1XX

- 1:TUBE
- 2:TAPE & REEL
- 3:BAG
- NO. OF POSITIONS

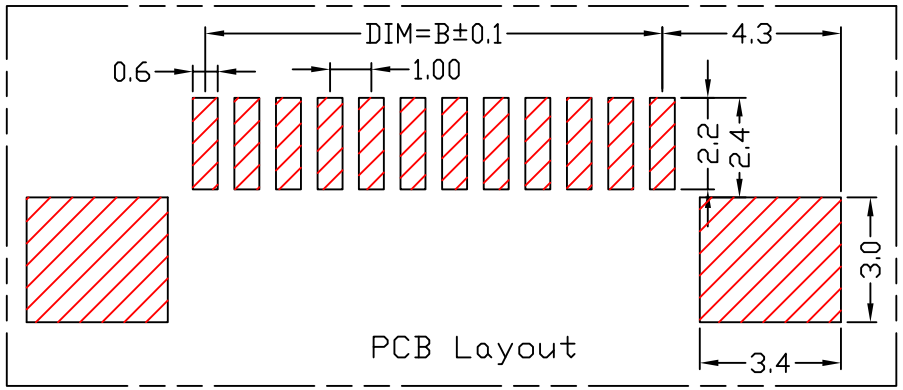

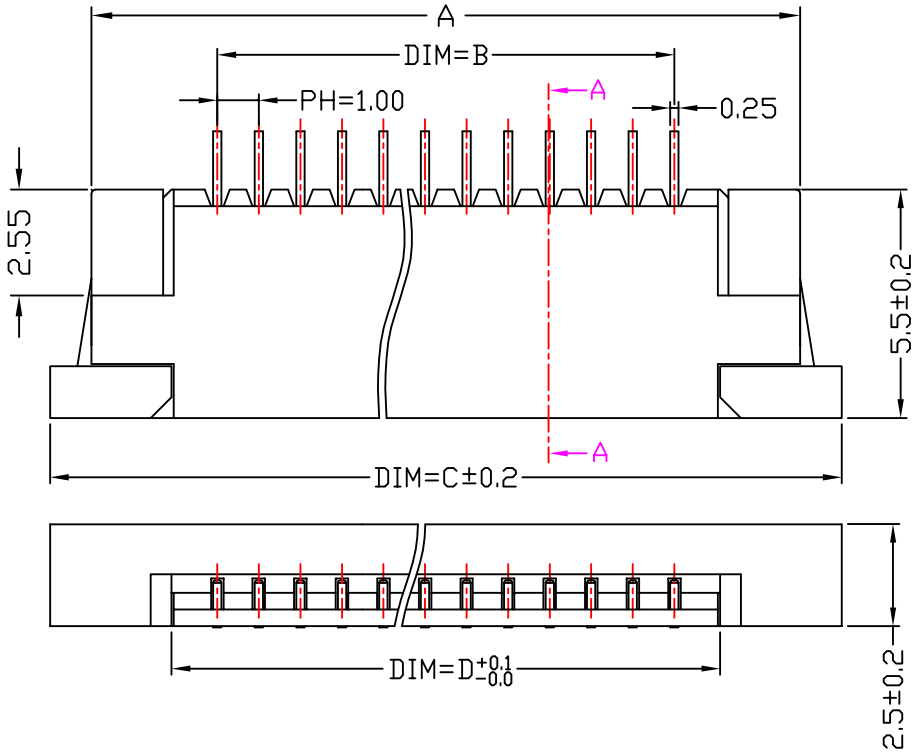

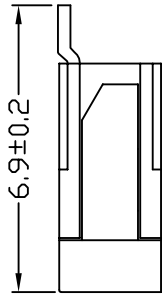

BOTTOM CONTACT

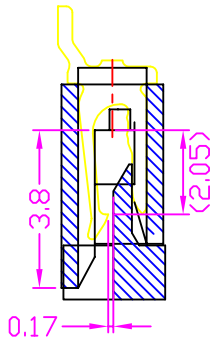

SECTION:A-A

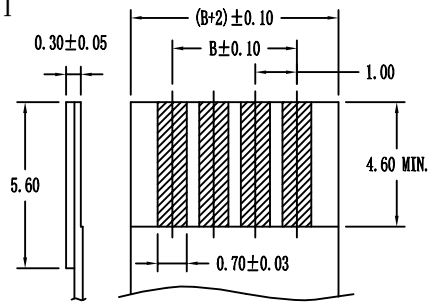

NO. OF POSITIONS	DIM=A	DIM=B	DIM=C	DIM=D
30P	35.1	29.00	37.0	31.10
~~29P~~	~~34.1~~	~~28.00~~	~~36.0~~	~~30.10~~
~~28P~~	~~33.1~~	~~27.00~~	~~35.0~~	~~29.10~~
~~27P~~	~~32.1~~	~~26.00~~	~~34.0~~	~~28.10~~
26P	31.1	25.00	33.0	27.10
25P	30.1	24.00	32.0	26.10
24P	29.1	23.00	31.0	25.10
~~23P~~	~~28.1~~	~~22.00~~	~~30.0~~	~~24.10~~
22P	27.1	21.00	29.0	23.10
~~21P~~	~~26.1~~	~~20.00~~	~~28.0~~	~~22.10~~
20P	25.1	19.00	27.0	21.10
19P	24.1	18.00	26.0	20.10
18P	23.1	17.00	25.0	19.10
17P	22.1	16.00	24.0	18.10
16P	21.1	15.00	23.0	17.10
15P	20.1	14.00	22.0	16.10
14P	19.1	13.00	21.0	15.10
13P	18.1	12.00	20.0	14.10
12P	17.1	11.00	19.0	13.10
11P	16.1	10.00	18.0	12.10
10P	15.1	9.00	17.0	11.10
9P	14.1	8.00	16.0	10.10
8P	13.1	7.00	15.0	9.10
7P	12.1	6.00	14.0	8.10
6P	11.1	5.00	13.0	7.10
5P	10.1	4.00	12.0	6.10
4P	9.1	3.00	11.0	5.10

△	DATE	ECR
△	080610	DP變更
△		
△		
△		

ARC ELECTRO INDUSTRY CORP.
www.arc-electro.com

PART NAME: FPC ZIF P1.00 BOTTOM CONTACT

PART NUMBER: 5F2.2435E-126X1.1XX

S/C NO

APPROVAL	CHECKED	DRAWING	DRAWING NO	DATE	REV	SCALE	UNIT	NO.
David	David	David	AK11123	110503	1.2		mm	

TOLERANCE:

X. ±0.50	.X ±2°
.X ±0.30	.XX ±1°
.XX ±0.20	B1149
.XXX ±0.10	D006-S215-1

PIN数	DIM=A	DIM=B	DIM=C	DIM=W	DIM=D	单边/双边孔
4P	4.8	9.9	11.6	24.0	25.5	单边孔
5P	5.8	10.9	12.6	24.0	25.5	单边孔
6P	6.8	11.9	13.6	24.0	25.5	单边孔
7P	7.8	12.9	14.6	24.0	25.5	单边孔
8P	8.8	13.9	15.6	24.0	25.5	单边孔
9P	9.8	14.9	16.6	24.0	25.5	单边孔
10P	10.8	15.9	17.6	24.0	25.5	单边孔
11P	11.8	16.9	18.6	24.0	25.5	单边孔
12P	12.8	17.9	19.6	32.0	33.5	双边孔
13P	13.8	18.9	20.6	32.0	33.5	双边孔
14P	14.8	19.9	21.6	32.0	33.5	双边孔
15P	15.8	20.9	22.6	44.0	45.5	双边孔
16P	16.8	21.9	23.6	44.0	45.5	双边孔
17P	17.8	22.9	24.6	44.0	45.5	双边孔
18P	18.8	23.9	25.6	44.0	45.5	双边孔
19P	19.8	24.9	26.6	44.0	45.5	双边孔
20P	20.8	25.9	27.6	44.0	45.5	双边孔
21P	21.8	26.9	28.6	44.0	45.5	双边孔
22P	22.8	27.9	29.6	44.0	45.5	双边孔
23P	23.8	28.9	30.6	44.0	45.5	双边孔
24P	24.8	29.9	31.6	44.0	45.5	双边孔
25P	25.8	30.9	32.6	44.0	45.5	双边孔
26P	26.8	31.9	33.6	44.0	45.5	双边孔
27P	27.8	32.9	34.6	44.0	45.5	双边孔
28P	28.8	33.9	35.6	44.0	45.5	双边孔
29P	29.8	34.9	36.6	44.0	45.5	双边孔
30P	30.8	35.9	37.6	56.0	57.5	双边孔

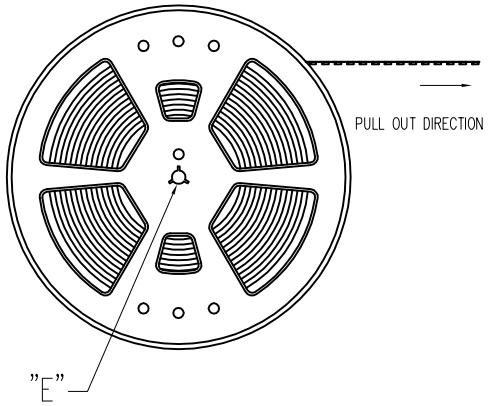

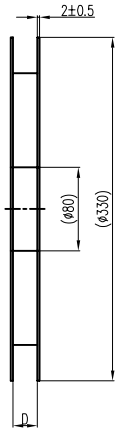

NOTES:

1.Number Of Connectors: 1500 Pcs/Reel

2.Material:

Carrier Tape: POLYPROPYLENE

Top Tape: PET,PE,PEF

Reel: PS

3.Lead Tape Length:

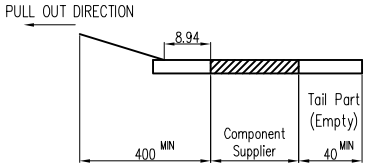

4.Peeling off force of top tape:
0.1N~0.7N(10.2gf~71.4gf)
(Peeling direction as shown in following fig)

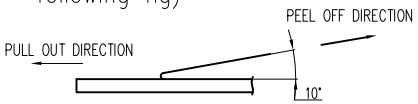

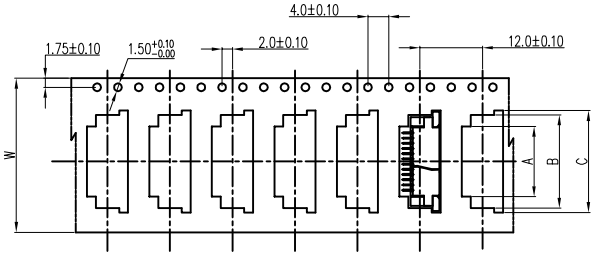

单边孔

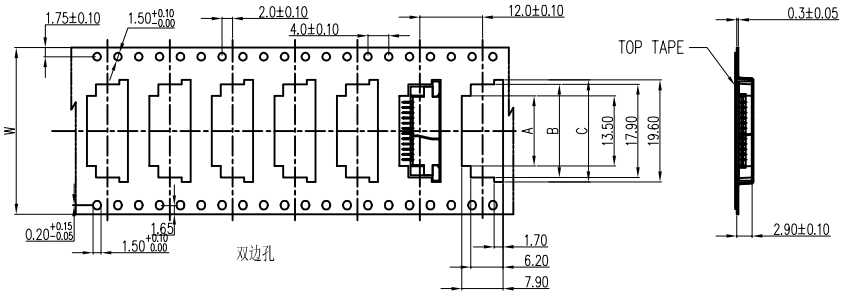

双边孔

