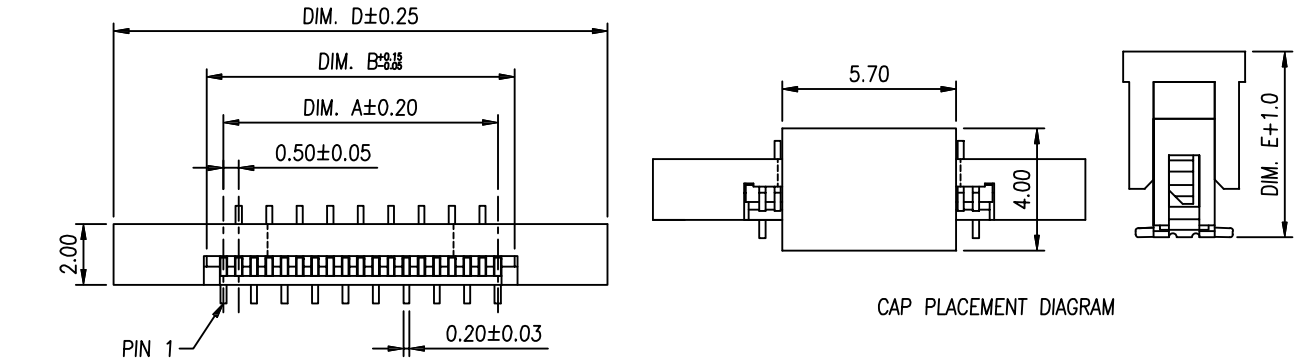

CAP PLACEMENT DIAGRAM

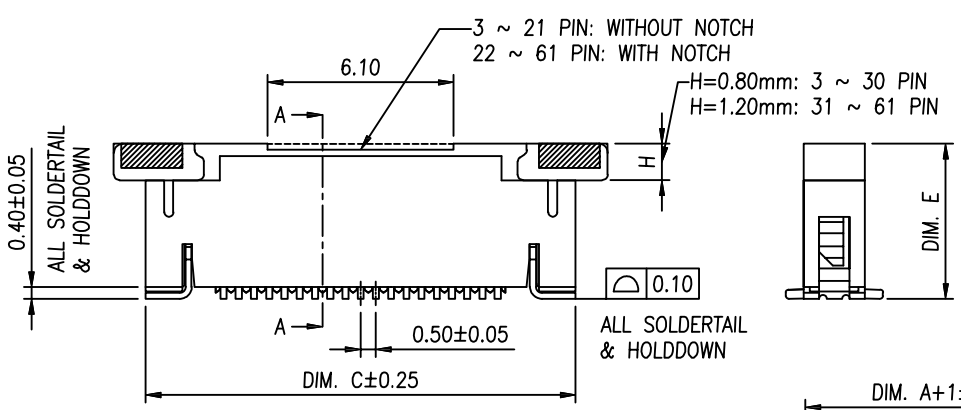

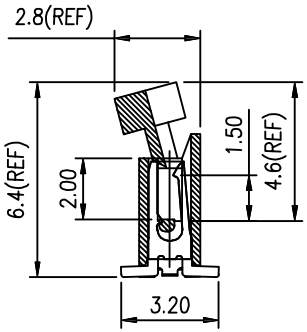

SECTION A-A

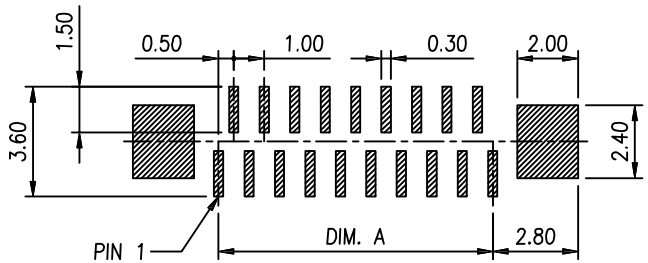

RECOMMENDED PCB LAYOUT
TOLERANCE: ±0.05

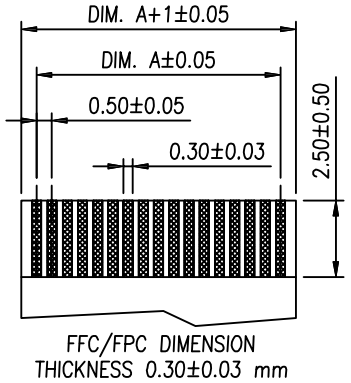

FFC/FPC DIMENSION
THICKNESS 0.30±0.03 mm

NOTE:
1. MATERIAL:
   1.1 CONTACT: PHOSPHOR BRONZE.
   1.2 INSULATOR:
   BODY:PA46 UL 94V-0(NATURE);
   SLIDER:PA9T UL 94V-0(BLACK) .
   1.3 FINISH: TIN OVER Ni
3. ALL MATERIAL MUST BE COMPLY WITH RoHS.
4. PART NO.
   5F2.2536A-4XXX0.1XX
   - 1:TUBE
   - 2:REEL
   - 75:W/CAP
   - 3C:W/O CAP

△	DATE	ECR	ARC ELECTRO INDUSTRY CORP.				PART NAME: FPC P0.50 180°SMT TUBE A TYPE					S/C NO	TOLERANCE:	
△							PART NUMBER: 5F2.2536A-4XXX0.1XX						X. ±0.50	
△													.X ±0.30	
△			APPROVAL	CHECKED	DRAWING	DRAWING NO	DATE	REV	SCALE	UNIT	NO.		.XX ±0.20	B253
△			David	David	David	AK11604	121206	1.1		mm			.XXX ±0.10	D006-S347

■ DIMENSION TABLE

Pos.	Dimension					Pos.	Dimension					Pos.	Dimension				
	A	B	C	D	E		A	B	C	D	E		A	B	C	D	E
3	1.00	2.10	6.10	8.20	4.70	23	11.00	12.10	16.10	18.20	4.70	43	21.00	22.10	26.10	28.20	5.10
4	1.50	2.60	6.60	8.70	4.70	24	11.50	12.60	16.60	18.70	4.70	44	21.50	22.60	26.60	28.70	5.10
5	2.00	3.10	7.10	9.20	4.70	25	12.00	13.10	17.10	19.20	4.70	45	22.00	23.10	27.10	29.20	5.10
6	2.50	3.60	7.60	9.70	4.70	26	12.50	13.60	17.60	19.70	4.70	46	22.50	23.60	27.60	29.70	5.10
7	3.00	4.10	8.10	10.20	4.70	27	13.00	14.10	18.10	20.20	4.70	47	23.00	24.10	28.10	30.20	5.10
8	3.50	4.60	8.60	10.70	4.70	28	13.50	14.60	18.60	20.70	4.70	48	23.50	24.60	28.60	30.70	5.10
9	4.00	5.10	9.10	11.20	4.70	29	14.00	15.10	19.10	21.20	4.70	49	24.00	25.10	29.10	31.20	5.10
10	4.50	5.60	9.60	11.70	4.70	30	14.50	15.60	19.60	21.70	4.70	50	24.50	25.60	29.60	31.70	5.10
11	5.00	6.10	10.10	12.20	4.70	31	15.00	16.10	20.10	22.20	5.10	51	25.00	26.10	30.10	32.20	5.10
12	5.50	6.60	10.60	12.70	4.70	32	15.50	16.60	20.60	22.70	5.10	52	25.50	26.60	30.60	32.70	5.10
13	6.00	7.10	11.10	13.20	4.70	33	16.00	17.10	21.10	23.20	5.10	53	26.00	27.10	31.10	33.20	5.10
14	6.50	7.60	11.60	13.70	4.70	34	16.50	17.60	21.60	23.70	5.10	54	26.50	27.60	31.60	33.70	5.10
15	7.00	8.10	12.10	14.20	4.70	35	17.00	18.10	22.10	24.20	5.10	55	27.00	28.10	32.10	34.20	5.10
16	7.50	8.60	12.60	14.70	4.70	36	17.50	18.60	22.60	24.70	5.10	56	27.50	28.60	32.60	34.70	5.10
17	8.00	9.10	13.10	15.20	4.70	37	18.00	19.10	23.10	25.20	5.10	57	28.00	29.10	33.10	35.20	5.10
18	8.50	9.60	13.60	15.70	4.70	38	18.50	19.60	23.60	25.70	5.10	58	28.50	29.60	33.60	35.70	5.10
19	9.00	10.10	14.10	16.20	4.70	39	19.00	20.10	24.10	26.20	5.10	59	29.00	30.10	34.10	36.20	5.10
20	9.50	10.60	14.60	16.70	4.70	40	19.50	20.60	24.60	26.70	5.10	60	29.50	30.60	34.60	36.70	5.10
21	10.00	11.10	15.10	17.20	4.70	41	20.00	21.10	25.10	27.20	5.10	61	30.00	31.10	35.10	37.20	5.10
22	10.50	11.60	15.60	17.70	4.70	42	20.50	21.60	25.60	27.70	5.10						

△	DATE	ECR	ARC ELECTRO INDUSTRY CORP.				PART NAME: FPC P0.50 180°SMT TUBE A TYPE					S/C NO	TOLERANCE:	
△							PART NUMBER: 5F2.2536A-4XXX0.1XX						X. ±0.50	
△													.X ±0.30	
△			APPROVAL	CHECKED	DRAWING	DRAWING NO	DATE	REV	SCALE	UNIT	NO.		.XX ±0.20	B253
△			David	David	David	AK11604	121206	1.1		mm			.XXX ±0.10	D006-S347

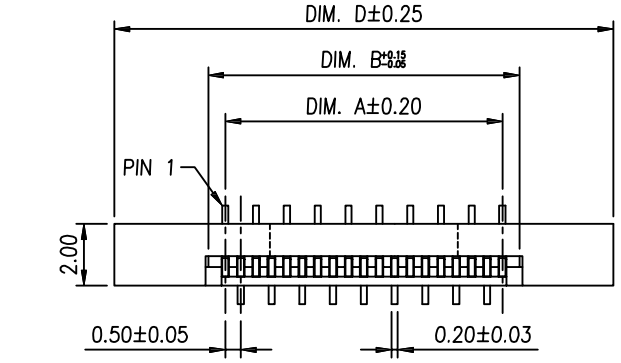

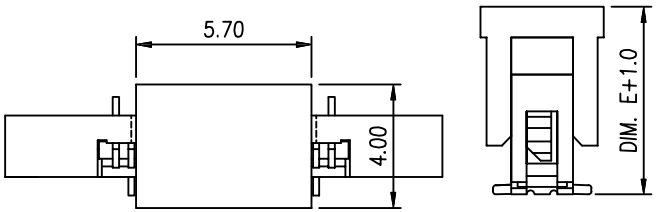

CAP PLACEMENT DIAGRAM

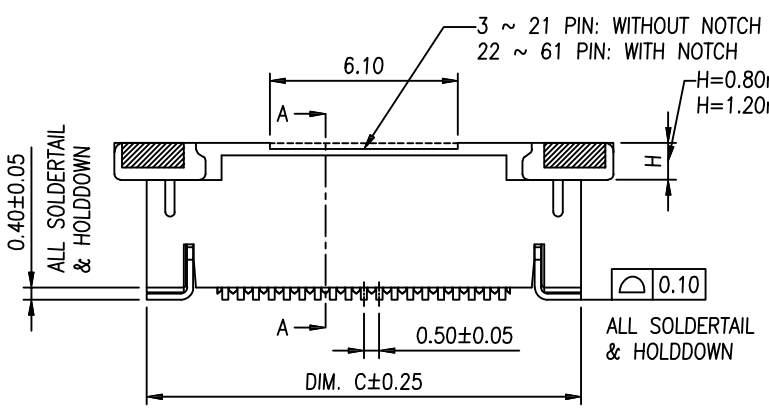

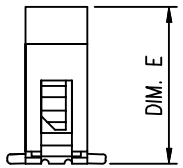

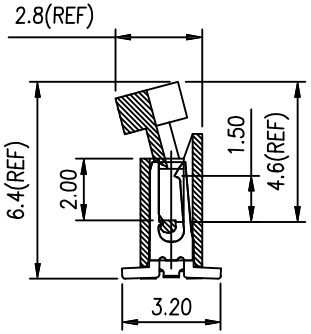

SECTION A-A

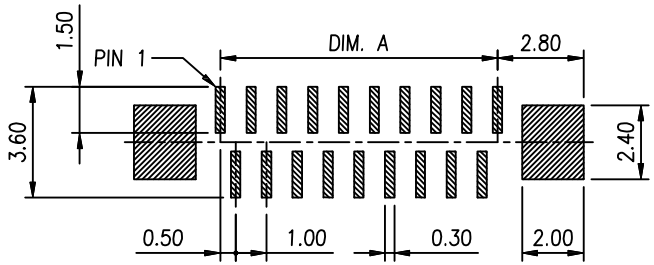

RECOMMENDED PCB LAYOUT
TOLERANCE: ±0.05

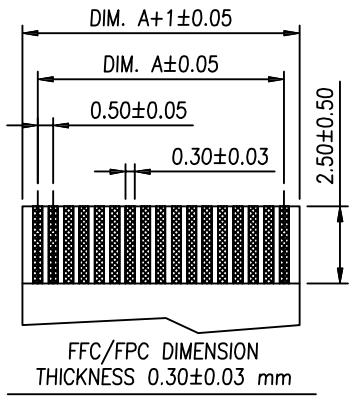

FFC/FPC DIMENSION
THICKNESS 0.30±0.03 mm

NOTE:
1. MATERIAL:
   1.1 CONTACT: PHOSPHOR BRONZE.
   1.2 INSULATOR:
       BODY:PA46 UL 94V-0(NATURE);
       SLIDER:PA9T UL 94V-0(BLACK) .
   1.3 FINISH: TIN OVER Ni
3. ALL MATERIAL MUST BE COMPLY WITH RoHS.
4. PART NO.
   5F2.2536A-5XXX0.1XX
   - 1:TUBE
   - 2:REEL
   - 75:W/CAP
   - 3C:W/O CAP

△	DATE	ECR	ARC ELECTRO INDUSTRY CORP.	PART NAME: FPC P0.50 180°SMT TUBE B TYPE	S/C NO	TOLERANCE:
△				PART NUMBER: 5F2.2536A-5XXX0.1XX		X. ±0.50
△						.X ±0.30
△						.XX ±0.20 B253
△						.XXX ±0.10 D006-S347

APPROVAL	CHECKED	DRAWING	DRAWING NO	DATE	REV	SCALE	UNIT	NO.
David	David	David	AK11604	121206	1.1		mm	

■ DIMENSION TABLE

Pos.	Dimension				
	A	B	C	D	E
3	1.00	2.10	6.10	8.20	4.70
4	1.50	2.60	6.60	8.70	4.70
5	2.00	3.10	7.10	9.20	4.70
6	2.50	3.60	7.60	9.70	4.70
7	3.00	4.10	8.10	10.20	4.70
8	3.50	4.60	8.60	10.70	4.70
9	4.00	5.10	9.10	11.20	4.70
10	4.50	5.60	9.60	11.70	4.70
11	5.00	6.10	10.10	12.20	4.70
12	5.50	6.60	10.60	12.70	4.70
13	6.00	7.10	11.10	13.20	4.70
14	6.50	7.60	11.60	13.70	4.70
15	7.00	8.10	12.10	14.20	4.70
16	7.50	8.60	12.60	14.70	4.70
17	8.00	9.10	13.10	15.20	4.70
18	8.50	9.60	13.60	15.70	4.70
19	9.00	10.10	14.10	16.20	4.70
20	9.50	10.60	14.60	16.70	4.70
21	10.00	11.10	15.10	17.20	4.70
22	10.50	11.60	15.60	17.70	4.70

Pos.	Dimension				
	A	B	C	D	E
23	11.00	12.10	16.10	18.20	4.70
24	11.50	12.60	16.60	18.70	4.70
25	12.00	13.10	17.10	19.20	4.70
26	12.50	13.60	17.60	19.70	4.70
27	13.00	14.10	18.10	20.20	4.70
28	13.50	14.60	18.60	20.70	4.70
29	14.00	15.10	19.10	21.20	4.70
30	14.50	15.60	19.60	21.70	4.70
31	15.00	16.10	20.10	22.20	5.10
32	15.50	16.60	20.60	22.70	5.10
33	16.00	17.10	21.10	23.20	5.10
34	16.50	17.60	21.60	23.70	5.10
35	17.00	18.10	22.10	24.20	5.10
36	17.50	18.60	22.60	24.70	5.10
37	18.00	19.10	23.10	25.20	5.10
38	18.50	19.60	23.60	25.70	5.10
39	19.00	20.10	24.10	26.20	5.10
40	19.50	20.60	24.60	26.70	5.10
41	20.00	21.10	25.10	27.20	5.10
42	20.50	21.60	25.60	27.70	5.10

Pos.	Dimension				
	A	B	C	D	E
43	21.00	22.10	26.10	28.20	5.10
44	21.50	22.60	26.60	28.70	5.10
45	22.00	23.10	27.10	29.20	5.10
46	22.50	23.60	27.60	29.70	5.10
47	23.00	24.10	28.10	30.20	5.10
48	23.50	24.60	28.60	30.70	5.10
49	24.00	25.10	29.10	31.20	5.10
50	24.50	25.60	29.60	31.70	5.10
51	25.00	26.10	30.10	32.20	5.10
52	25.50	26.60	30.60	32.70	5.10
53	26.00	27.10	31.10	33.20	5.10
54	26.50	27.60	31.60	33.70	5.10
55	27.00	28.10	32.10	34.20	5.10
56	27.50	28.60	32.60	34.70	5.10
57	28.00	29.10	33.10	35.20	5.10
58	28.50	29.60	33.60	35.70	5.10
59	29.00	30.10	34.10	36.20	5.10
60	29.50	30.60	34.60	36.70	5.10
61	30.00	31.10	35.10	37.20	5.10

△	DATE	ECR
△		
△		
△		
△		

ARC ELECTRO INDUSTRY CORP.

PART NAME: FPC P0.50 180°SMT TUBE B TYPE

PART NUMBER: 5F2.2536A-5XXX0.1XX

S/C NO

APPROVAL	CHECKED	DRAWING	DRAWING NO	DATE	REV	SCALE	UNIT	NO.
David	David	David	AK11604	121206	1.1		mm	

TOLERANCE:

X. ± 0.50	
.X ± 0.30	
.XX ± 0.20	B253
.XXX ±0.10	D006-S347