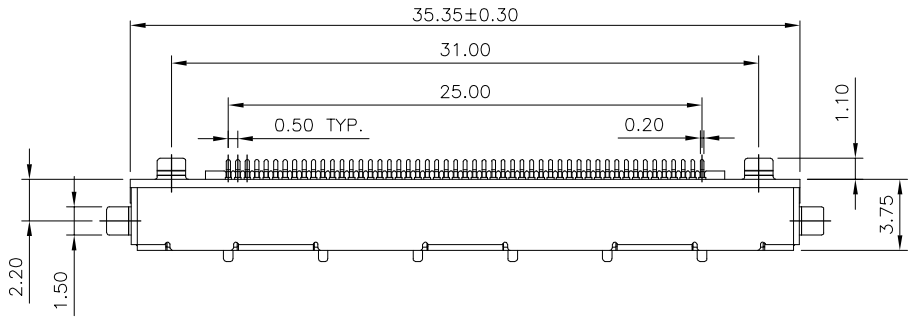

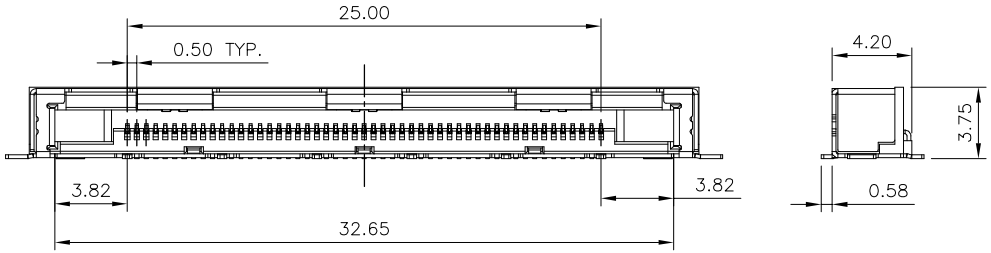

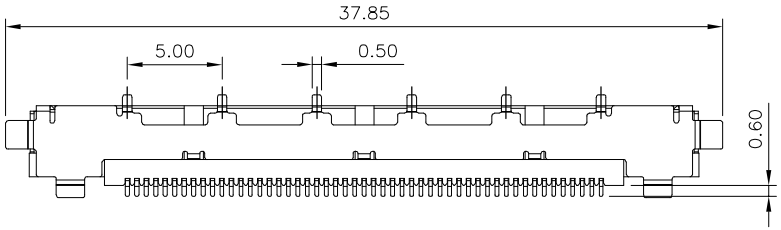

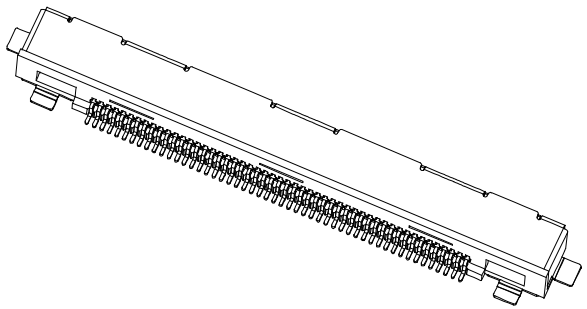

NOTE:
1 ELECTRIC CHARACTERISTICS:
1.1 INSULATION RESISTANCE: 100MΩ MIN.
1.2 DIELETRIC WITHSTANDING VOLTAGE: 500V AC MIN.
1.3 LOW LEVEL CONTACT RESISTANCE: 50mΩ MAX.
1.4 CURRENT RATING: 0.7A MAX.

2 ENVIRONMENTAL CHARACTERISTICS:
2.1 OPERATION TEMPERATURE: −40°C~85°C

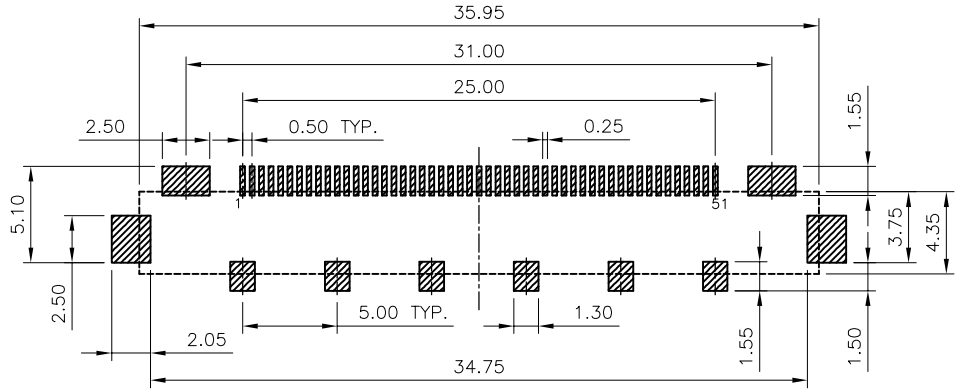

RECOMMENDED PCB LAYOUT
TOP VIEW (TOLERANCE±0.05)

ITEM	COMPONENT	MATERIAL	FINISH	QTY.
3	SHELL	STAINLESS	TIN OVER NICKEL	1
2	TERMINAL	COPPER ALLOY	G/F CONTACT AREA	51
1	HOUSING	TEMP. POLYMER	UL94 V−0, BLACK	1

	DATE	ECN NO.
1		211209007
1.1	20231113	廠商代碼新增"*"

ARC ELECTRO INDUSTRY CORP.
www.arc-electro.com

APPROVAL	CHECKED	DRAWING	DRAWING NO.
		Yipeng	AK12990

TITLE	LVDS P0.5 51P H3.75	S/C NO.
PN.	5H1.24310−H1100.151	−−−

DATE	REVISION	SCALE	UNIT	PAGE
20231113	1.1		mm	1/2

TOLERANCE:			
X.	±0.50	.X	±5°
.X	±0.35	.XX	±3°
.XX	±0.25	1.1	B1264*
.XXX	±0.10		D040−LD05

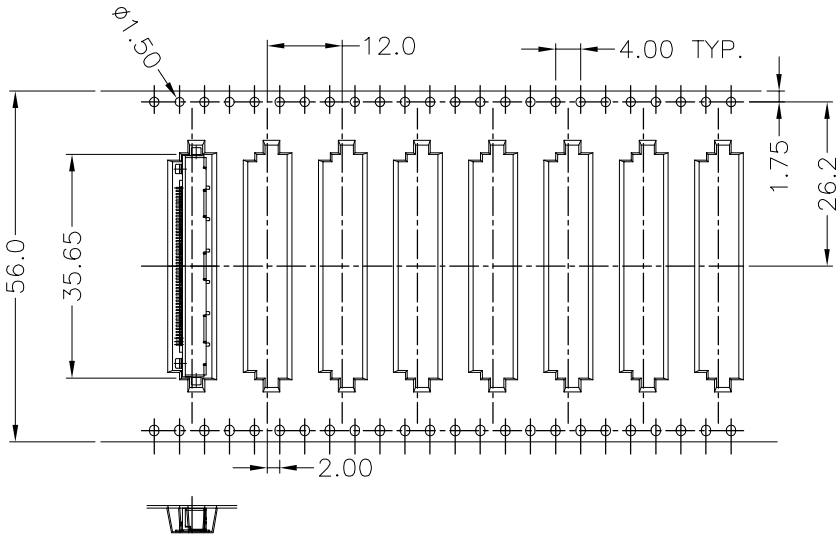

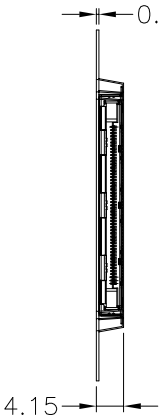

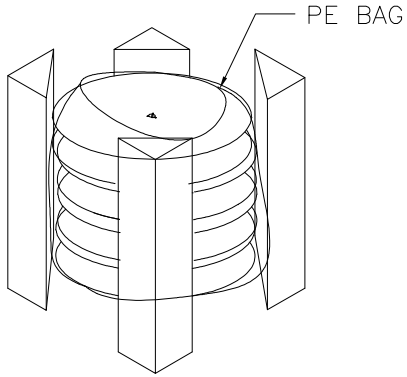

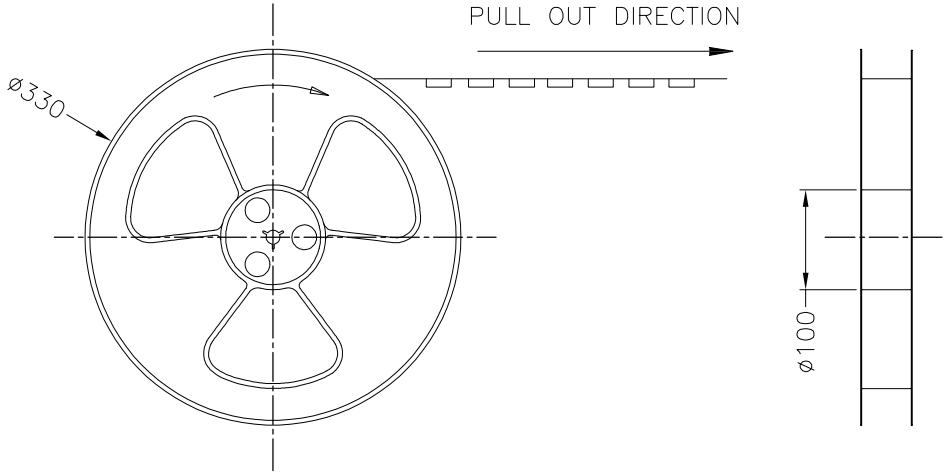

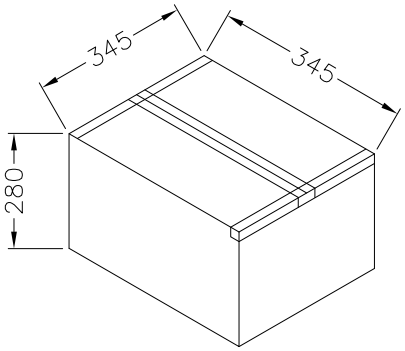

NOTE: 1000PCS/REEL, 4000PCS/ 4 REEL/ CARTON

	DATE	ECN NO.	ARC ELECTRO INDUSTRY CORP. www.arc-electro.com				TITLE	LVDS P0.5 51P H3.75				S/C NO.	TOLERANCE:	
1		211209007					PN.	5H1.24310-H1100.151				---	X. ±0.50	.X ±5°
1.1	20231113	廠商代碼新增"*"											.X ±0.35	.XX ±3°
			APPROVAL	CHECKED	DRAWING	DRAWING NO.	DATE	REVISION	SCALE	UNIT	PAGE		.XX ±0.25	1.1 B1264*
					Yipeng	AK12990	20231113	1.1		mm	2/2		.XXX ±0.10	D040-LD05