


NOTES:

1. MATERIAL:
   - 1.1 HOUSING: LCP , UL94 V–0, COLOR: BLACK
   - 1.2 CONTACT: BRASS

2. PLATING:
   - CONTACT: GOLD PLATING ONCONTACT AREA. (REF. PART LEGEND)
   - Sn PLATING ON SOLDER AREA.
   - Ni UNDER PLATED OVER ALL.

3. PACK: TUBE.

4. PATR NO. LEGEND:
   - 5P3.2215C–1X381.064
   - L: GOLD FLASH
   - F: 15u" Au

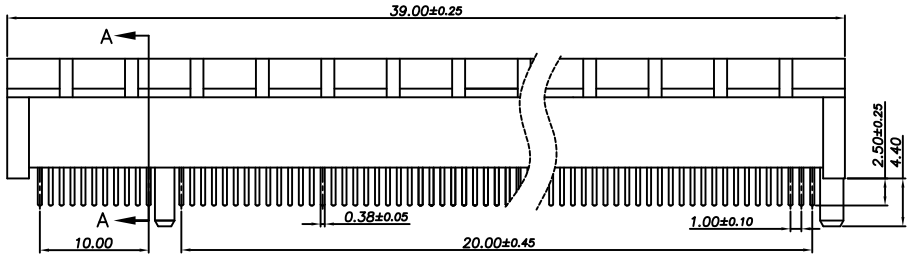


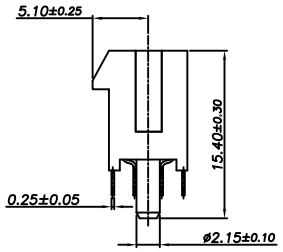


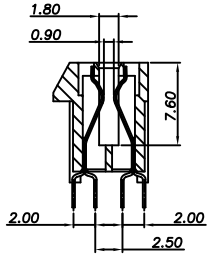


SEC. A–A

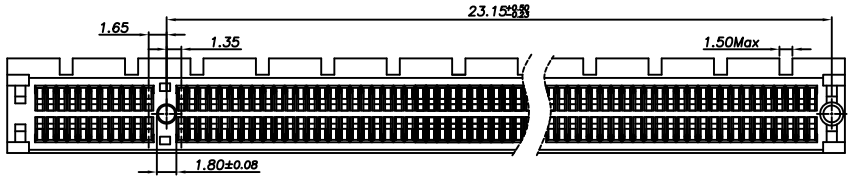


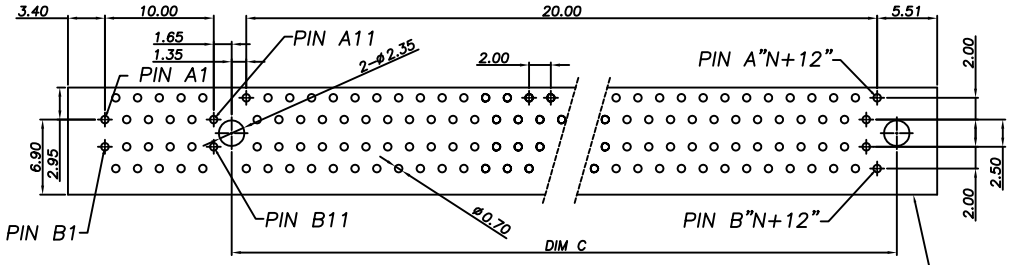


RECOMMENDED OF PC BOARD Holes KEEP OUT AREA
Tolerance:±0.05 (Top View)

| | DATE | ECR |
|---|---|---|
| | | NRFQ-2003-030 |
| | | |
| | | |
| | | |

ARC ELECTRO INDUSTRY CORP.
www.arc-electro.com

PART NAME: PCI Express 180° 64P H2.50 DIP TYPE

PART NUMBER: 5P3.2215C-1X381.064

S/C NO

TOLERANCE:

| APPROVAL | CHECKED | DRAWING | DRAWING NO | DATE | REV | SCALE | UNIT | NO. |
|---|---|---|---|---|---|---|---|---|
| Philip | Sean | Sean | AK12933 | 20200401 | 1.0 | | mm | 1/2 |

| | |
|---|---|
| .X ±0.30 | |
| .XX ±0.20 | B1184 |
| .XXX ±0.10 | D042-V410 |

5GC. BD. 0010A

1.DIMENSION:(mm)
a>TUBE: L=610、W=10.3、H=17.0mm;
b>Inner CARTON: L=635、W=120、H=195mm;
c>Out CARTON: L=650、W=255、H=235mm;
2.QUANTITY:
a> 15 PCS/TUBE;
b> 25 TUBE/SHEAF(375 pcs)
c> 4 SHEAF/Inner CARTON(1500 pcs)
d> 2 Inner CARTON/Out CARTON (3000 pcs)

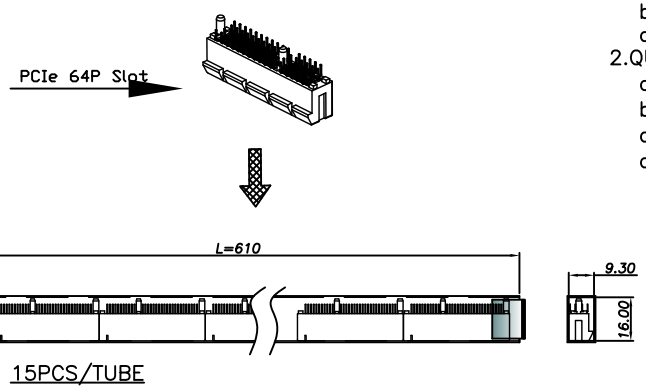


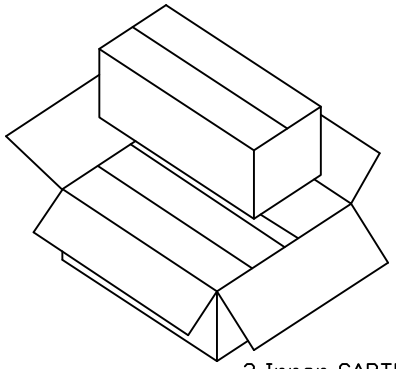


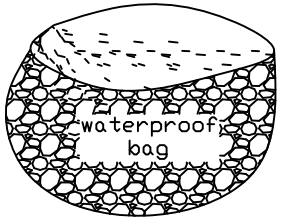


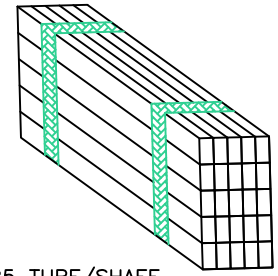


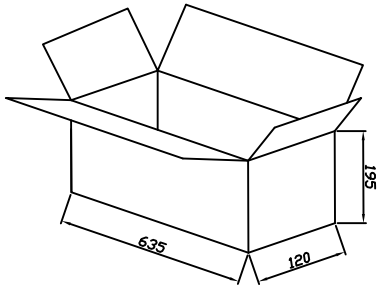


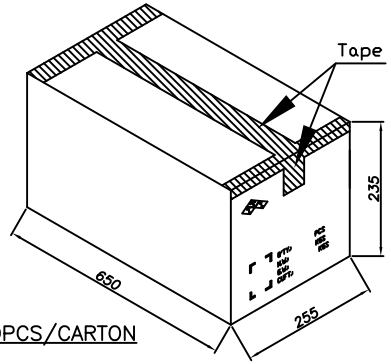


| | DATE | ECR | | | | | | | | | | TOLERANCE: | |
|---|---|---|---|---|---|---|---|---|---|---|---|---|---|
| △ | | NRFQ-2003-030 | ARC ELECTRO INDUSTRY CORP. www.arc-electro.com | | | PART NAME: PCI Express 180° 64P H2.50 DIP TYPE | | | | S/C NO | | | |
| △ | | | | | | PART NUMBER: 5P3.2215C-1X381.064 | | | | | | .X ±0.30 | |
| △ | | | APPROVAL | CHECKED | DRAWING | DRAWING NO | DATE | REV | SCALE | UNIT | NO. | .XX ±0.20 | B1184 |
| △ | | | Philip | Sean | Sean | AK12933 | 20200401 | 1.0 | | mm | 2/2 | .XXX ±0.10 | D042-V410 |

5GC. BD. 0010A